NOWAK



TANDEM Bed Frame

PATENT

www.an-nowak.com

NOWAK



Closed | Pull out | Lift | Ready to sleep










Mattress retainer

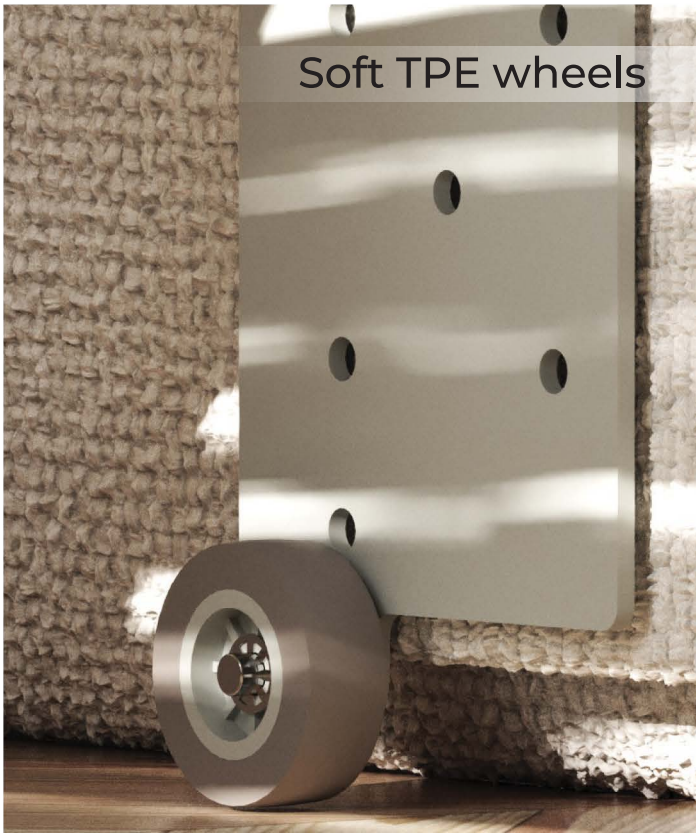
Soft TPE wheels


Birch slats
Two beds in one


Pull-out stop


Spring-assisted lift


Mattresses up to 15 cm

NOWAK

Frame versions



15 slats

20 slats

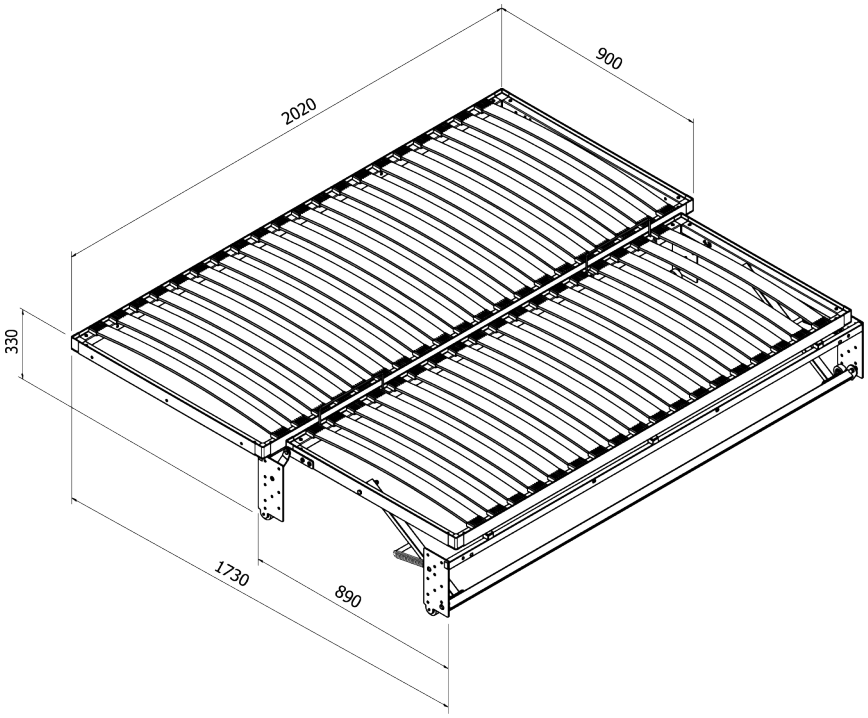

	TANDEM 15 slats	TANDEM 20 slats
ITEM CODE	WL-00034-B03	WL-00040-B03
Main frame	900x2020 mm	900x2020 mm
Pull-out frame	800x1855 mm	800x1855 mm
Number of slats	15+14	20+18

NOWAK

+48 62 79 123 00
bok@an-nowak.com
ul. Granitowa 47
63-600 Olszowa
www.an-nowak.com